Leica Rugby 820/830
Quick Start

Version 1.0

- when it has to be **right**

Leica Geosystems

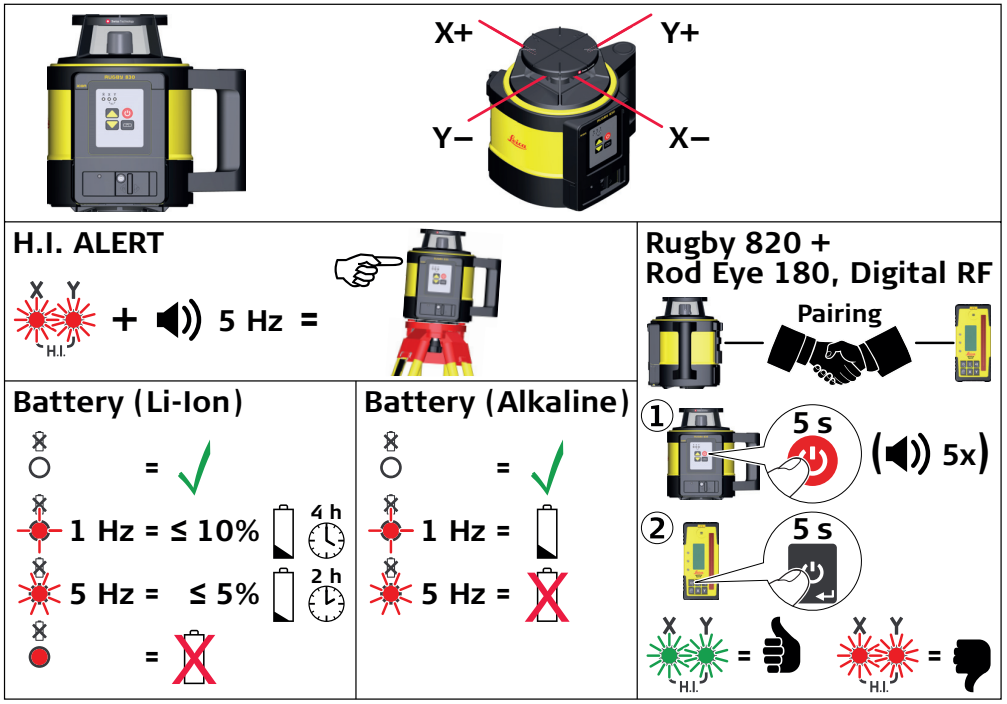

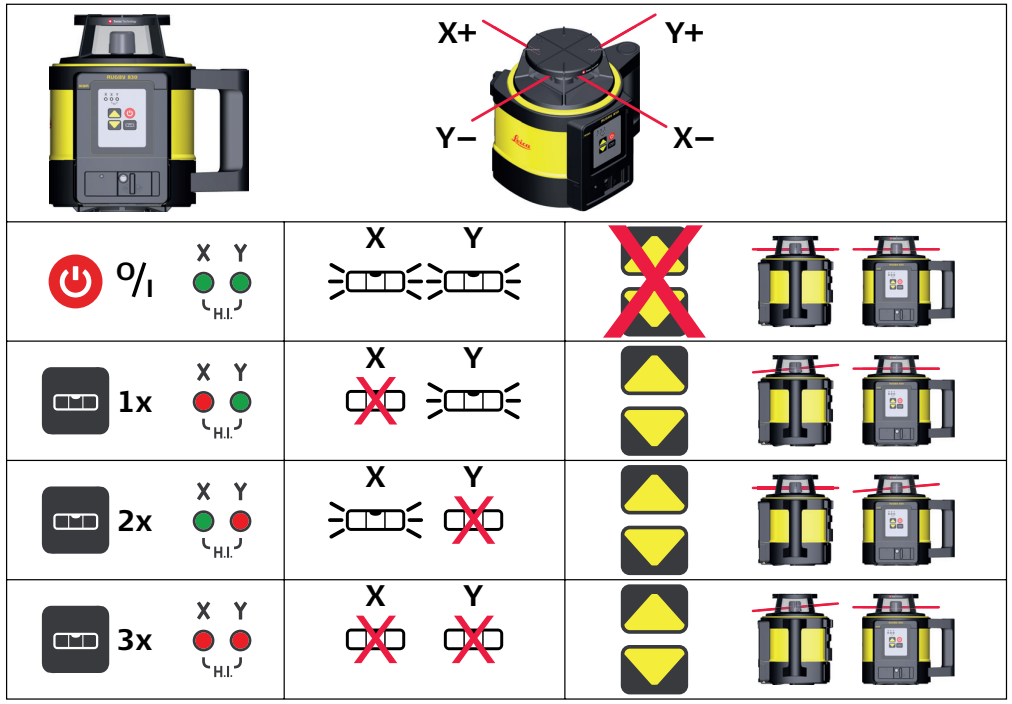

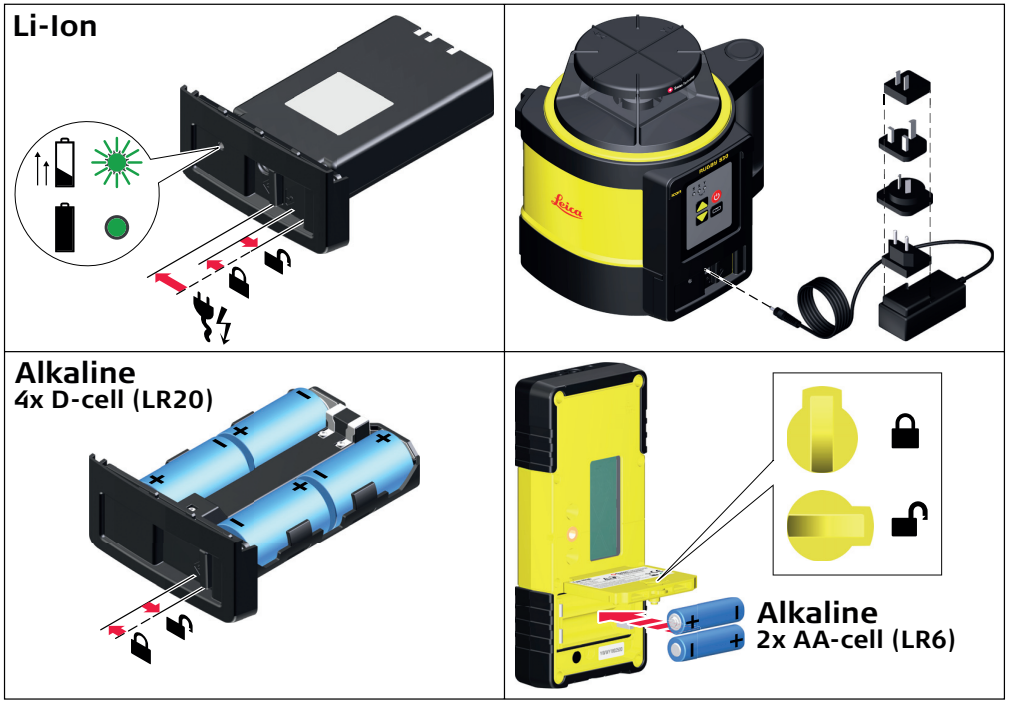

Rod Eye 160, Digital

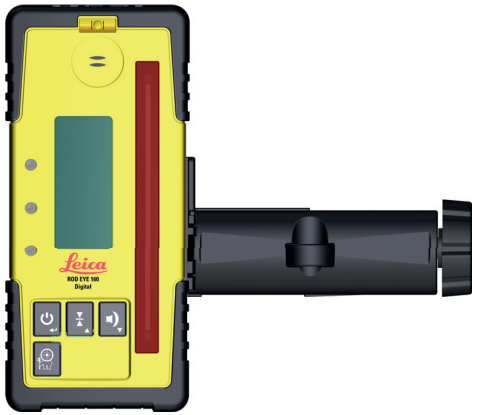

	⁰/ᵢ
	±0.5 mm, ±1 mm, ±2 mm, ±3 mm, ±5 mm
1x	mm 022

Setting Forms

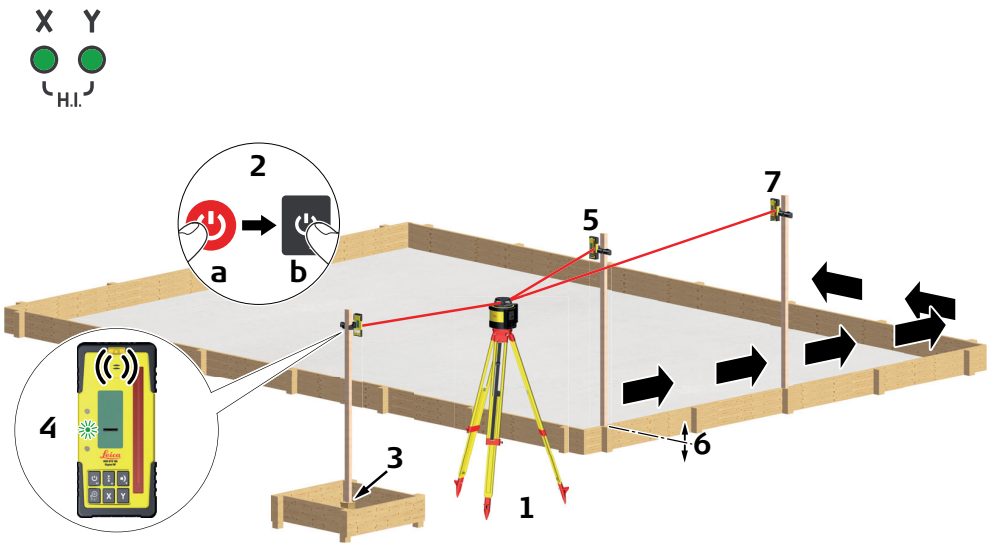

Rugby 820 + Rod Eye 180, Digital RF

	⁰/ᵢ
	±0.5 mm, ±1 mm, ±2 mm, ±3 mm, ±5 mm
1x	mm 022
1.5 s	Smart Target SMT ▶ XSC
5 s	Smart Target Lock SML ▶ XSL ▶ LOC

Checking Grades

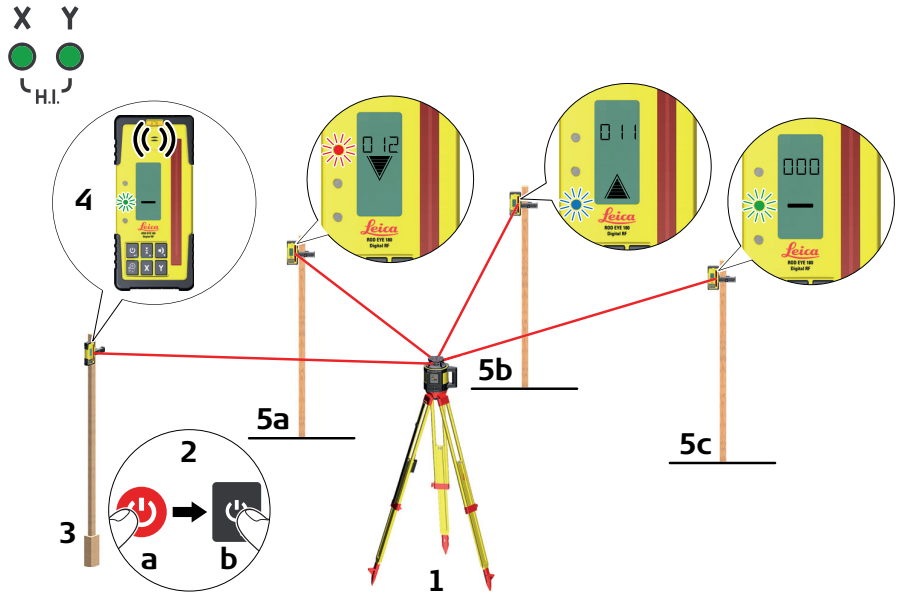

Manual Grading

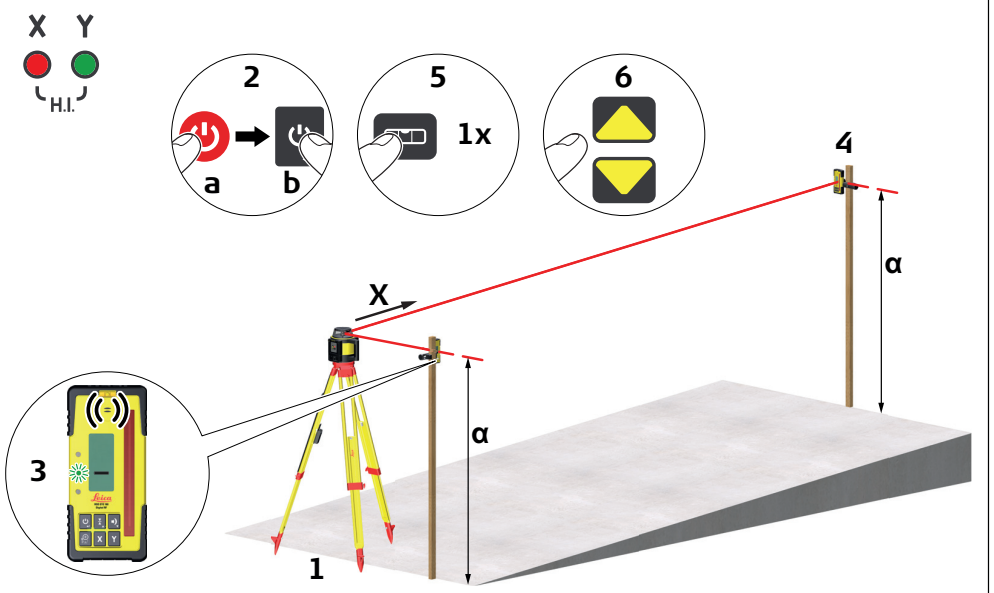

Smart Target Lock, Rugby 820 + Rod Eye 180 Digital RF

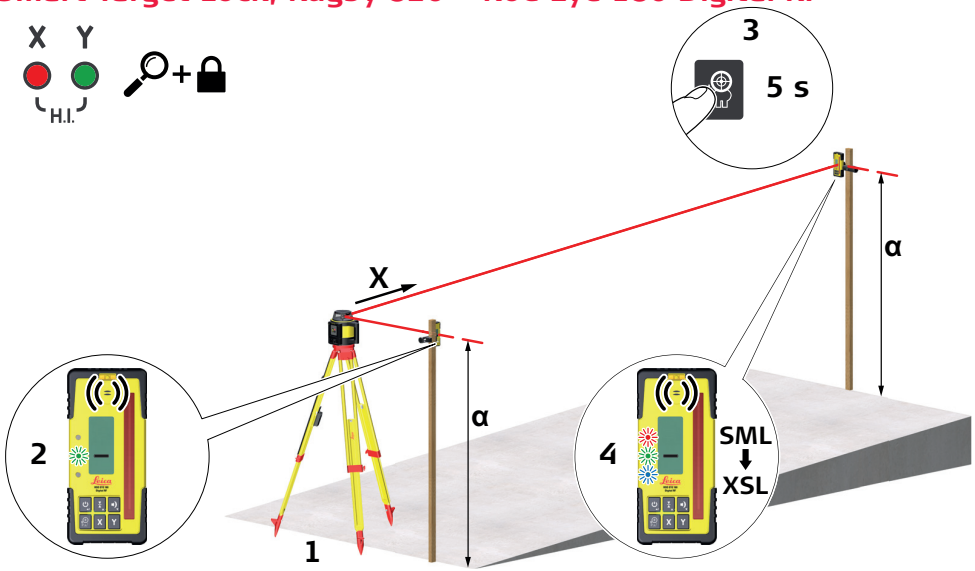

Smart Target, Rugby 820 + Rod Eye 180 Digital RF

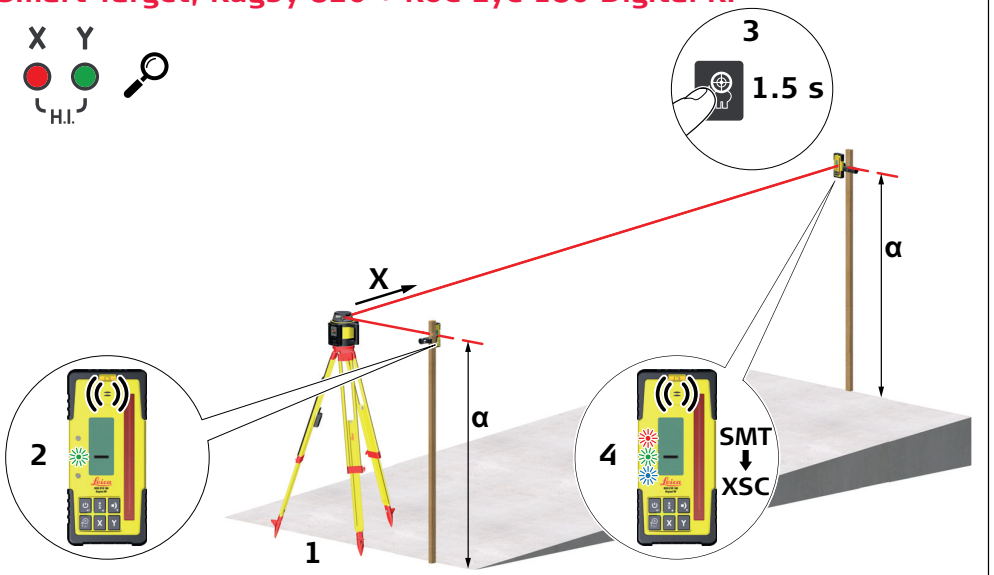

Laser class 2 product in
accordance with
IEC 60825-1

804571-1.0.0
Original text

© 2013 Leica Geosystems AG, Heerbrugg, Switzerland

Leica Geosystems AG
Heinrich-Wild-Strasse
CH-9435 Heerbrugg
Switzerland
Phone +41 71 727 31 31
www.leica-geosystems.com

- when it has to be **right**

Leica Geosystems